J-W WIRELINE COMPANY

CEMENT BOND
GAMMA RAY
COLLAR CORRELATION LOG

Company BONANZA CREEK ENERGY INC.
Well ANTELOPE 31-31
Field WATTENBERG
County WELD
State COLORADO

Company BONANZA CREEK ENERGY INC.
Well ANTELOPE 31-31
Field WATTENBERG
County WELD State COLORADO
API #: 05-123-32888-00
Location: SHL: 680' FNL & 660' FEL NE/NE
BHL: 605' FNL & 2012' FEL NW/NE
SEC 31 TWP 5N RGE 62W
Other Services NONE

Permanent Datum GROUND LEVEL Elevation 4606
Log Measured From KELLY BUSHING
Drilling Measured From KELLY BUSHING
Elevation K.B. 4616 D.F. 4615 G.L. 4606

Date	12-JUL-2011
Run Number	ONE
Depth Driller	6855
Depth Logger	6823
Bottom Logged Interval	6822
Top Log Interval	2200
Open Hole Size	7 7/8
Type Fluid	WATER
Density / Viscosity	--
Max. Recorded Temp.	224 F
Estimated Cement Top	2376
Time Well Ready	--
Time Logger on Bottom	--
Equipment Number	2337/1
Location	BRIGHTON
Recorded By	GREG JACKSON
Witnessed By	MS. BARB MARTIN

Borehole Record

Run Number	Bit	From	To

Tubing Record

Size	Weight	From	To

Casing Record	Size	Wgt/Ft	Top	Bottom
Surface String				
Prot. String				
Production String	4 1/2	11.6	SURFACE	TOTAL DEPTH
Liner				

<<< Fold Here >>>

All interpretations are opinions based on inferences from electrical or other measurements and we cannot and do not guarantee the accuracy or correctness of any interpretation, and we shall not, except in the case of gross or willful negligence on our part, be liable or responsible for any loss, costs, damages, or expenses incurred or sustained by anyone resulting from any interpretation made by any of our officers, agents or employees. These interpretations are also subject to our general terms and conditions set out in our current Price Schedule.

Comments

LOG CORRELATED TO HRI/CDN DATED 29-JUN-2011

THANK YOU FOR CHOOSING J-W WIRELINE

Sensor	Offset (ft)	Schematic	Description	Len (ft)	OD (in)	Wt (lb)
CCL	20.25	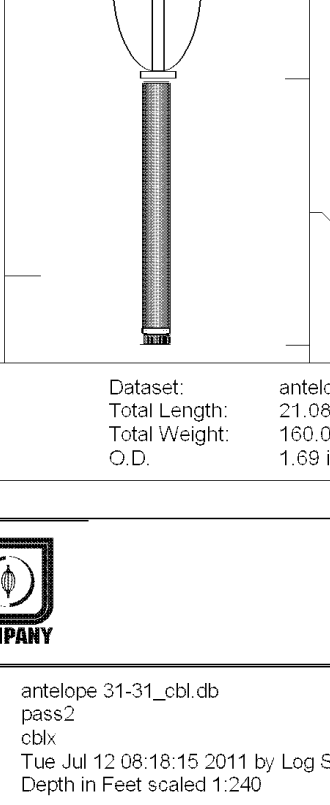	CCL-169TEKCO (169) 1 11/16" Tekco Logging	1.67	1.69	20.00
			CENT-TekCo (1 11/16 Adj.) (001) 1 11/16" Tekco Cent	2.92	1.69	10.00
WVF3 WVF5	11.00 10.17		CBL-3-5tekco169 (1) 1 11/16 Tekco w/o Temp	9.75	1.69	70.00
			CENT-TekCo (1 11/16 Adj.) (002) 1 11/16" Tekco Cent	2.92	1.69	10.00
GR	1.00		GR-1.69TEKCO (576) 1 11/16 Tekco Logging GR	3.83	1.69	50.00

Dataset: antelope 31-31_cbl.db: field/well/run1/pass1
Total Length: 21.08 ft
Total Weight: 160.00 lb
O.D. 1.69 in

J-W WIRELINE COMPANY

MAIN PASS

Database File: antelope 31-31_cbl.db
Dataset Pathname: pass2
Presentation Format: cblx
Dataset Creation: Tue Jul 12 08:18:15 2011 by Log Std Casedhole 10121
Charted by: Depth in Feet scaled 1:240

30 Gamma Ray (GAPI) 130
5 Collar Locator -0.25
300 TT3 (usec) 200
0 3' Amplitude (mV) 100
0 Amplified Amplitude (mV) 30
200 Variable Density 1200

30 Gamma Ray (GAPI) 130
5 Collar Locator -0.25
300 TT3 (usec) 200
0 3' Amplitude (mV) 100
0 Amplified Amplitude (mV) 30
200 Variable Density 1200

J-W WIRELINE COMPANY

MAIN PASS

LOG SPLIT FOR CORRELATION

Database File: antelope 31-31_cbl.db
Dataset Pathname: pass1
Presentation Format: cblx
Dataset Creation: Tue Jul 12 07:46:55 2011 by Log Std Casedhole 10121
Charted by: Depth in Feet scaled 1:240

0 Gamma Ray (GAPI) 180
5 Collar Locator -0.25
300 TT3 (usec) 200
0 3' Amplitude (mV) 100
0 Amplified Amplitude (mV) 30
200 Variable Density 1200

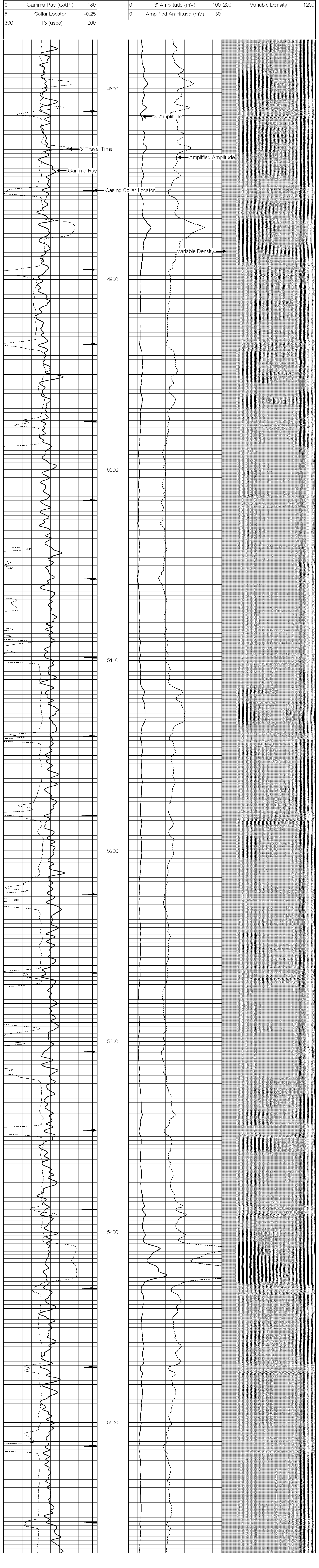

Calibration Report

Database File:	antelope 31-31_cbl.db
Dataset Pathname:	pass1
Dataset Creation:	Tue Jul 12 07:46:55 2011 by Log Std Casedhole 10121

Gamma Ray Calibration Report

Serial Number:	576	
Tool Model:	1.69TEKCO	
Performed:	Sun Jun 13 13:33:21 1993	
Calibrator Value:	1.0	GAPI
Background Reading:	0.0	cps
Calibrator Reading:	1.0	cps
Sensitivity:	1.0000	GAPI/cps

Cement Bond Log Calibration Report

Serial Number:	1		
Tool Model:	3-5tekco169		
Performed:	Tue Jul 12 07:44:49 2011		
Depth:	2112.96	ft	
Casing Diameter:	4.5	in	
	3' Spacing	5' Spacing	
Signal Zero:	3	0	mV
Calibrated Amplitude:	81.1961	81.1961	mV
Reading at Signal Zero:	0.06	0.03	V
Reading in Free Pipe:	2.01619	2.38257	V
Gain:	39.9737	34.5138	
Offset:	0.60158	-1.03541	